Western Products, PO Box 245038, Milwaukee, WI 53224-9538 • www.westernplows.com

November 15. 2020
Lit. No. 48592, Rev. 01

Suburbanite™ Personal Plow

27516-1 Hydraulic Kit
27550 Plow Gear Kit

Parts List

A DIVISION OF DOUGLAS DYNAMICS, LLC

TABLE OF CONTENTS

Suburbanite™ CENTER ASSEMBLY 4
- Plow Gear Kit 4
- Hydraulic Unit 6
- Lift and Angle Rams 8
- Parts Box 9
- Hoses and Fittings 9
- Vehicle-Side Wiring Diagram – 3-Port, 3-Plug Systems 10

Plow Gear Kit

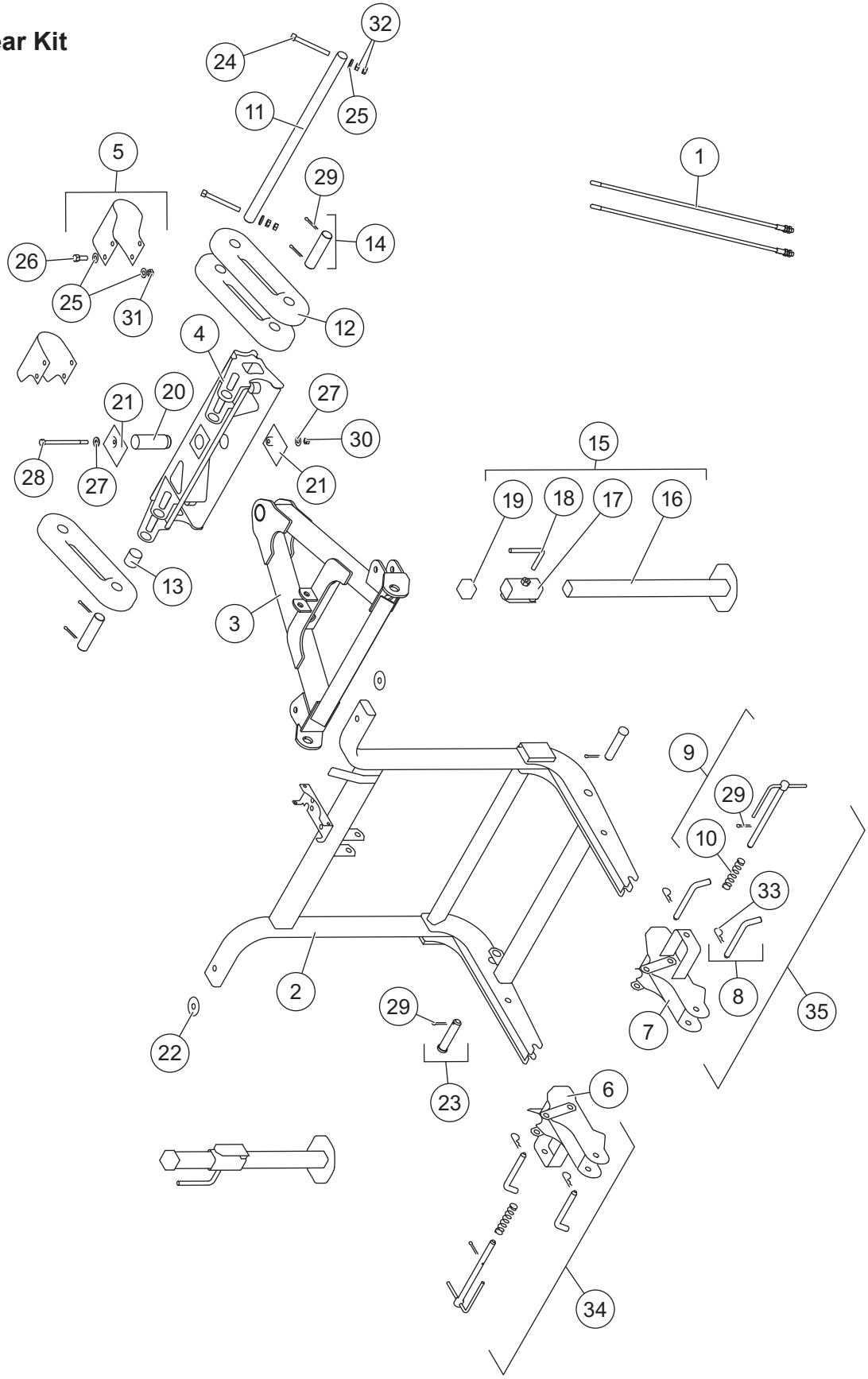

27550 Plow Gear Kit – Personal Plow							
Item	**Part**	**Qty**	**Description**	**Item**	**Part**	**Qty**	**Description**
1	27195W	1	Flexible Blade Guide Kit – 26" (pair)	18	27358	2	Jack Handle
2	27126	1	Plow Gear Frame, Personal Plow	19	27692	2	Square Vinyl Cap
3	27138	1	A-Frame, Personal Plow	20	27141W	1	Pivot Tube
4	27112	1	Quadrant, Personal Plow	21	27615	2	Trip Bumper
5	27577	2	Trip Clamp Replacement Kit w/Fasteners	22	4433	2	1/2 Flat Washer
				23	20639W	2	3/4 x 3-15/32 Machine Pin Packet
6	27146	1	Receiver – DS	24	27529	2	3/8-16 x 3-1/2 Hex Cap Screw G5
7	27611	1	Receiver – PS	25	63925	18	3/8 Flat Washer
8	27575W	4	Receiver Mounting Pin Kit	26	90039	8	3/8-16 x 1 Hex Cap Screw G5
9	27576	2	Receiver Pull Pin Kit	27	90313	2	5/16 Flat Washer
10	27461	2	Compression Spring	28	90602	1	5/16-18 x 5 Hex Cap Screw G5
11	27149	1	Spring Bar Tube	29	91911K	8	5/32 x 1-1/2 Cotter Pin
12	27351	3	Elastomeric Trip Spring	30	91332	1	5/16-18 Hex Locknut GB
13	27530	1	Trip Spring Spacer	31	91333	8	3/8-16 Hex Locknut GB
14	27711W	2	Lower Trip Spring Pin Kit	32	91413	4	3/8-16 Hex Nut G5
15	27360	2	Jack	33	91962	4	1/8 Hairpin Cotter
16	27355	2	Jack Leg	34	27754	1	Receiver Assembly – DS
17	27357	2	Jack Sleeve	35	27755	1	Receiver Assembly – PS
Item 34			**27754 Receiver Assembly – DS**				
		2	Receiver Mounting Pin	10	27461	1	Compression Spring
		1	Receiver Pull Pin	29	90658	1	5/32 x 1-1/4 Cotter Pin
6	27146	1	Receiver – DS	33	91962	2	1/8 Hairpin Cotter
Item 35			**27755 Receiver Assembly – PS**				
		2	Receiver Mounting Pin	10	27461	1	Compression Spring
		1	Receiver Pull Pin	29	90658	1	5/32 x 1-1/4 Cotter Pin
7	27611	1	Receiver – PS	33	91962	2	1/8 Hairpin Cotter
G = Grade							

Hydraulic Unit Components

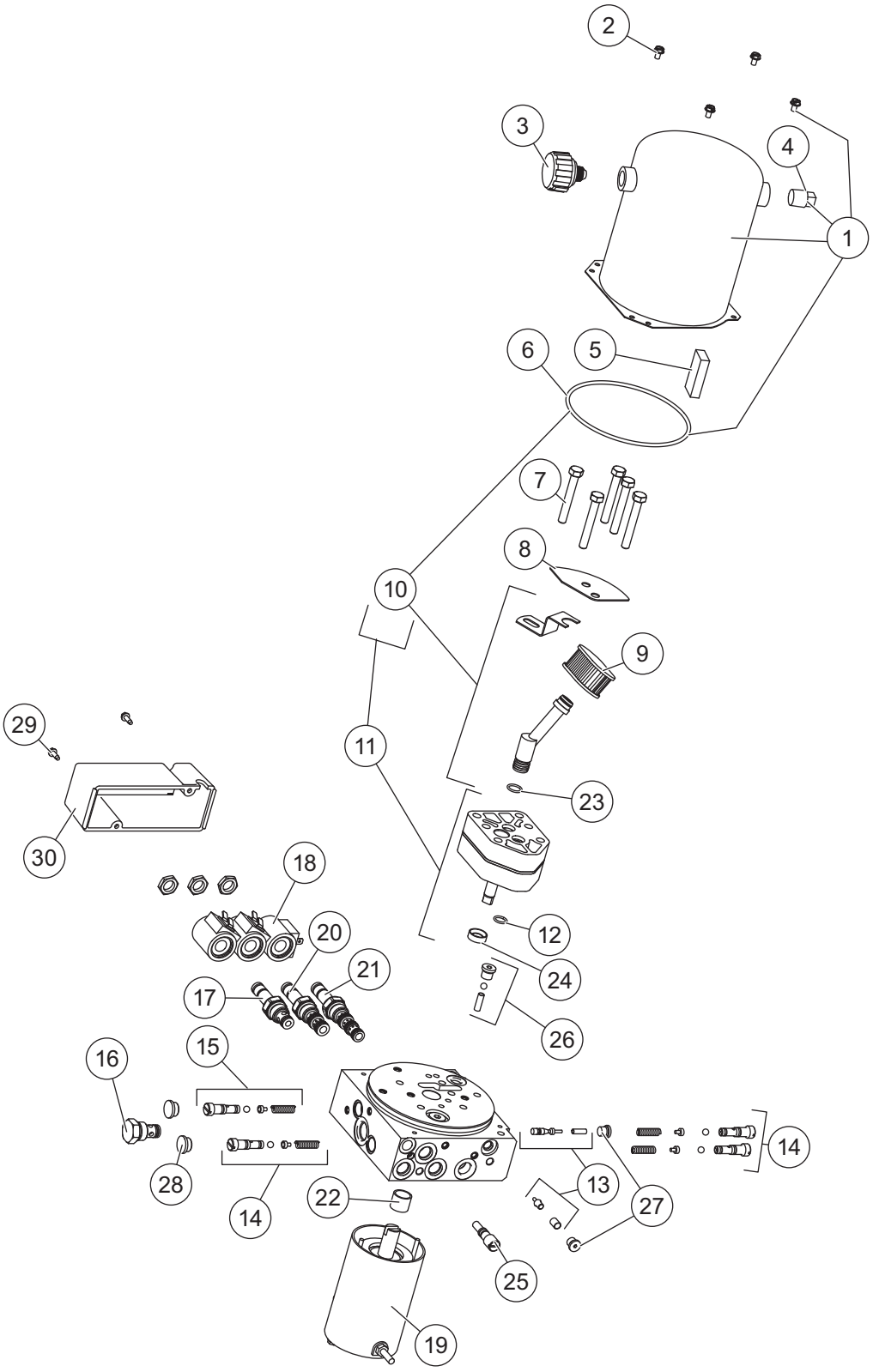

48602 Hydraulic Unit							
Item	**Part**	**Qty**	**Description**	**Item**	**Part**	**Qty**	**Description**
1	48538	1	Reservoir Kit	16	44334-1	1	Check Valve CV08-20
2	66607	4	#10-24 x 5/16 Slotted Hex Washer-Head Machine Screw	17	49227K-2	1	Valve 2-Way w/Nut
				18	49230K-2	3	Coil w/Spade Terminals
3	21727-2K	1	Breather 3/8 NPT Kit	19	48543-1	1	Motor Assembly 3"
4	92079	1	Plug 3/8 NPTF	20	66608-1	1	Cartridge Valve 3-Way w/Nut
5	73897	1	Magnet	21	49229K-1	1	Cartridge Valve 4-Way w/Nut
6	66519	1	O-Ring 2–250	22	56364*	1	Bearing, Sleeve
7	90073	5	5/16-18 x 2-1/4 Hex Cap Screw G5	23	56416	1	O-Ring -014
8	48464	1	Plate Baffle	24	66515**	1	Pump Shaft Seal
9	56789-5	1	Suction Filter	25	48517	1	Quill
10	66763-1	1	Inlet Fitting/Filter Kit	26	48518	1	Check Valve Assembly
11	27746	1	Hydraulic Pump Kit – IA	27	92960	2	3/8-24 O-Ring Boss Plug
12	56274	1	O-Ring -013	28	56808	2	Plug
13	49226K	1	Poppet Check Valve Kit	29	90650	2	Cover Screw
14	49138K-5	2	Relief Valve Kit (2 sets)	30	21394	1	Cover Assembly
15	27792-1	1	Relief Valve Repair Kit				
O-Ring Service Kits							
ns	56657-6	–	O-Ring & Back-Up Ring Kit	ns	49259-2	–	Seal Kit Cartridge 3-Way and 4-Way Valve
ns	49258-2	–	Seal Kit 2-Way Valve				
ns = not shown				G = Grade			

* Use 64589 tool to install (includes 56364).
** Use 28856 tool to install (includes 66515).

48597 Personal Plow Hydraulic Bolt Bag*					
Part	**Qty**	**Description**	**Part**	**Qty**	**Description**
56615-1	7	Elbow, 90° –6 M JIC/–6 M ORB		2	1/4-20 x 2-3/4 Hex Cap Screw G5
64212-1	1	Elbow, Long 90° –6	56099	1	Dielectric Grease Tube
	2	1/2-13 x 4 Hex Cap Screw G8	59223	4	Cable Tie
	3	1/2-13 x 3 Hex Cap Screw G8	61536	7	Long Cable Tie
	1	1/2-13 x 2-1/2 Hex Cap Screw G8		2	1/4-20 Hex Locknut GB
	6	1/2-13 Hex Locknut GB			
8737 Bolt Bag*					
5048	1	1/4 Fully-Insulated Blade		1	M6 x 1 x 25 Hex Cap Screw G8.8
21306	1	0.187 Insulated Receptacle		1	M6 x 1 Hex Nut G10
21307	1	0.250 Insulated Receptacle		1	M6 Flat Washer
21308	1	0.250 Tab Fuse Tap		2	1/4 Flat Washer
21309	1	0.187 Tab Fuse Tap		2	5/16 Spring Lock Washer
66130	1	Rubber Grommet		2	#10 Spring Lock Washer
	2	1/4-20 Hex Locknut GB		2	#10-32 Hex Machine Screw Nut
	2	1/4-20 x 3/4 Hex Cap Screw G5		2	5/16-24 Hex Jam Nut G5
G = Grade			M = Male or Metric		

* Found in 48596 parts box.

Angle Ram Components

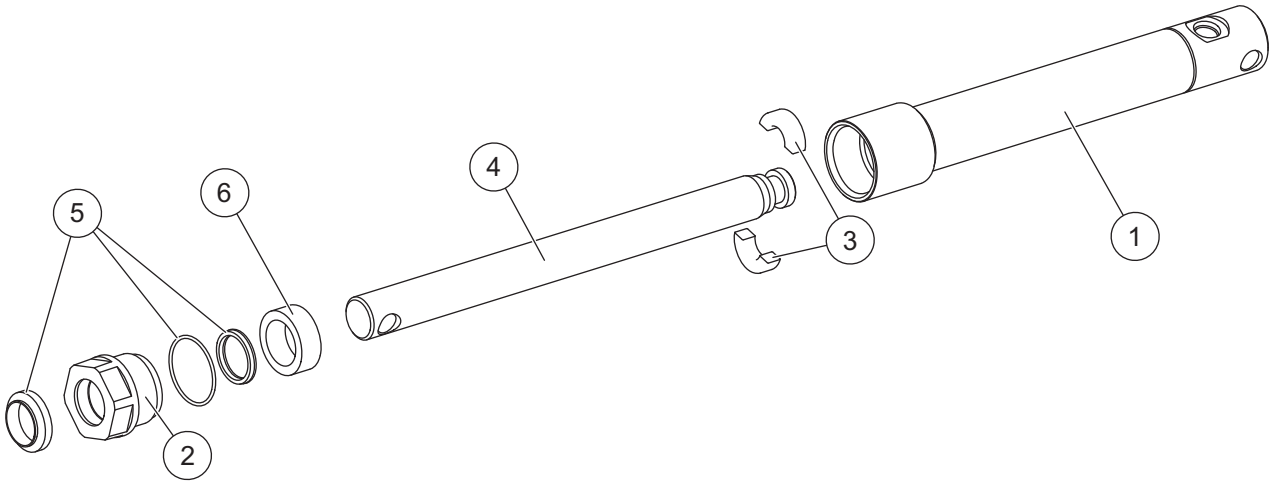

56772K 1 x 7 Ram Assembly							
Item	Part	Qty	Description	Item	Part	Qty	Description
1	56769	1	1 x 7 Cylinder	4	27786	1	1 x 7 Ram Rod Kit
2	66699K	1	Gland Nut	5	27787	1	1 Bore Ram Seal Kit
3	56771	1	1" Split Bearing Kit	6	56803	1	Spacer

Lift Ram Components

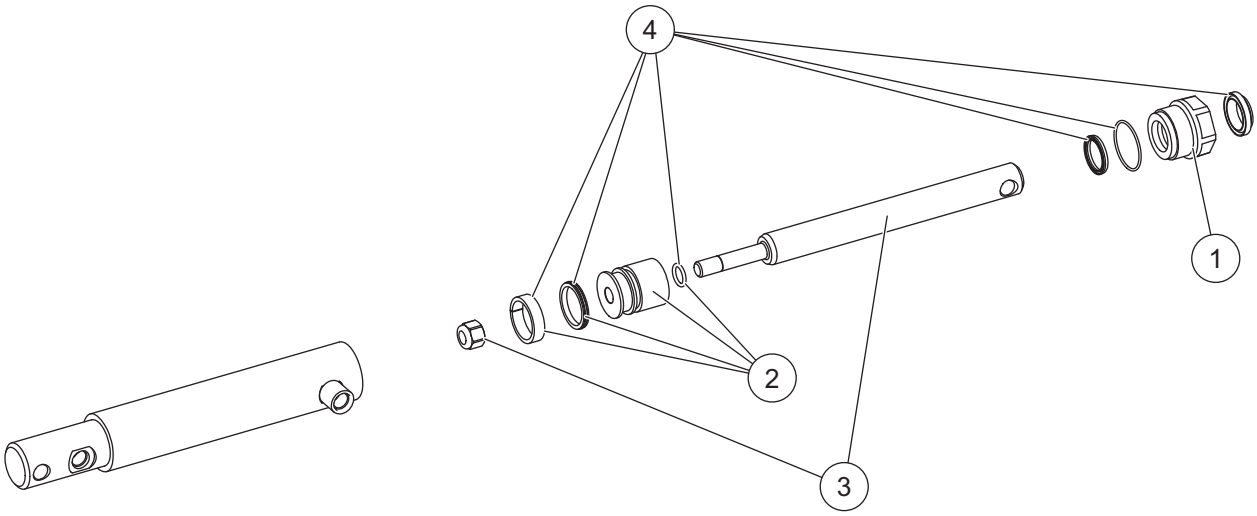

48600 1-1/2 x 6 Double-Acting Ram Assembly			
Item	Part	Qty	Description
1	66699K	1	Gland Nut
2	48606	1	1-1/2 Piston w/Seals
3	27790	1	1-1/2 x 6 Double-Acting Rod Assembly
4	27788-1	1	1-1/2 Bore Double-Acting Ram Seal Kit

Parts Box

48596 Parts Box					
Part	Qty	Description	Part	Qty	Description
56598	1	Hose, 1/4 x 22 w/F JIC Ends	61246	1	Cable Boot
56599	2	Hose, 1/4 x 36 w/F JIC Ends	8737	1	Small Bolt Bag
44347	1	Hose, 1/4 x 12 w/F JIC Ends	48597	1	Personal Plow Hydraulic Bolt Bag
22511K	1	Battery Cable 22" Red	21727-2K	1	Breather
56131K-2	1	Relay Switch			
F = Female					

Hoses and Fittings

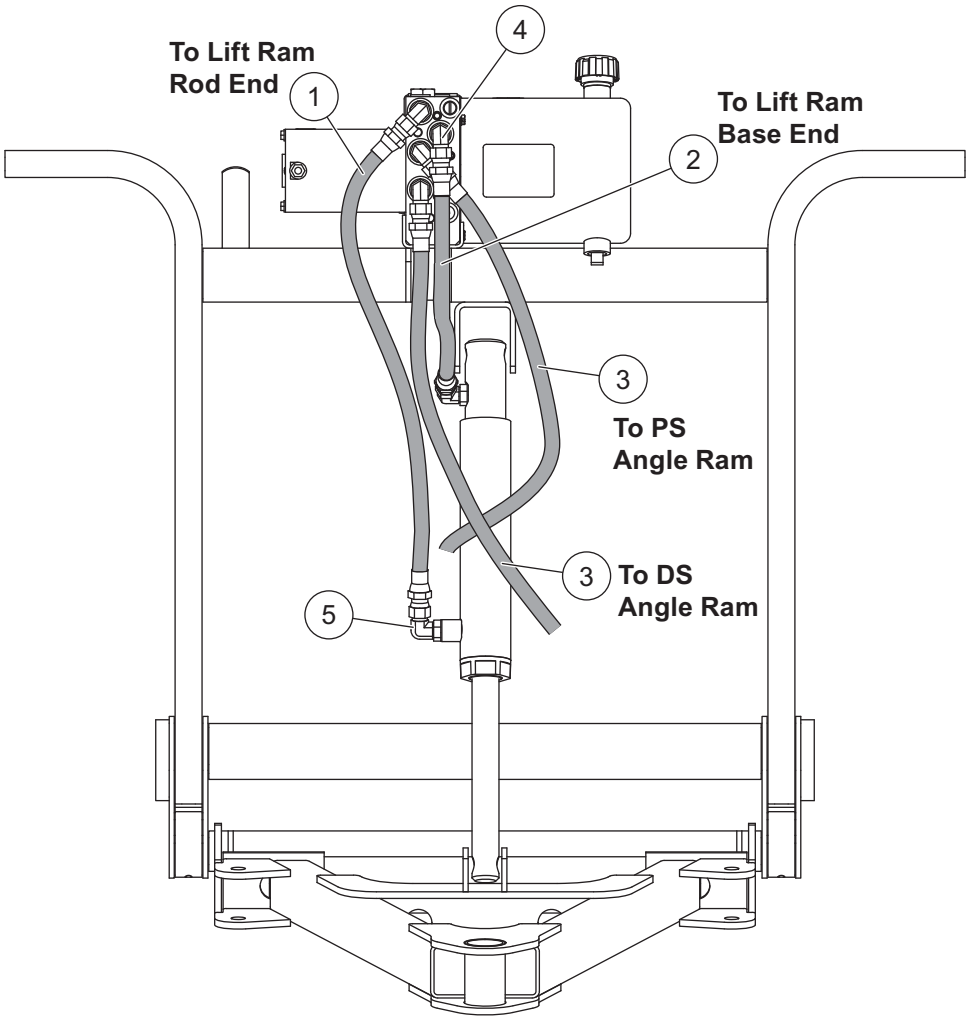

Hoses and Fittings							
Item	Part	Qty	Description	Item	Part	Qty	Description
1	56598	1	Hose, 1/4 x 22 w/F JIC Ends	4	64212-1	1	Elbow, Extra Long 90° –6 M JIC/ –6 M ORB
2	44347	1	Hose, 1/4 x 12 w/F JIC Ends				
3	56599	2	Hose, 1/4 x 36 w/F JIC Ends	5	56615-1	7	Elbow, 90° –6 M JIC/–6 M ORB
F = Female							

Vehicle-Side Harness Diagram
3-Port, 3-Plug System

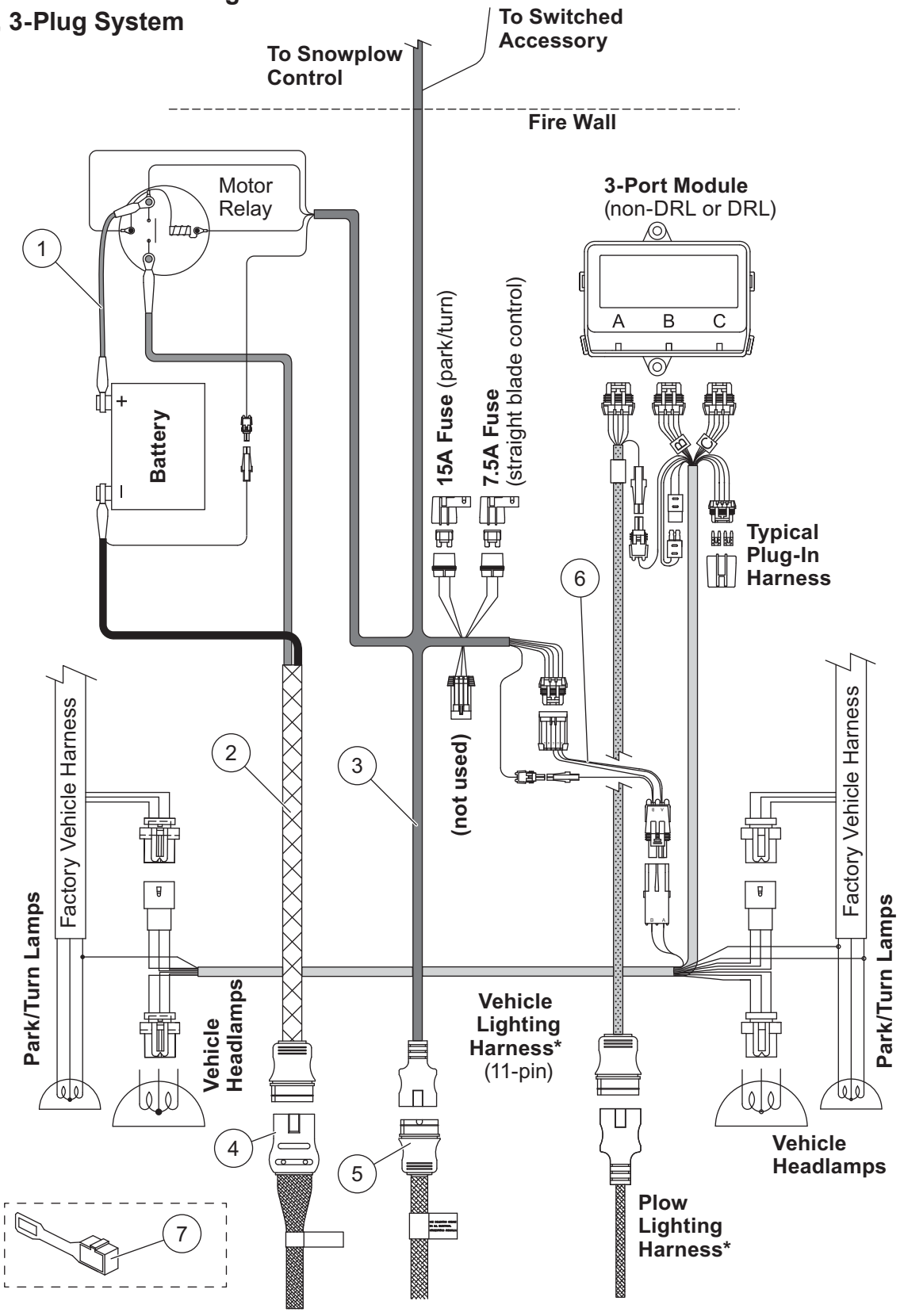

Harness Components							
Item	**Part**	**Qty**	**Description**	**Item**	**Part**	**Qty**	**Description**
1	22511K	1	Battery Cable, 22" Red	6	29047	1	Adapter 3-Port
2	63411	1	Vehicle Battery Cable	7	61548K	1	Plug Cover
3	26345	1	Vehicle Control Harness 3-Pin	ns	27063W	1	Replacement Harness End 3-Pin Vehicle-Side
4	21294	1	Plow Battery Cable				
5	26359	1	Plow Control Harness 3-Pin				
ns = not shown							

Western Products
PO Box 245038
Milwaukee, WI 53224-9538
www.westernplows.com

A DIVISION OF DOUGLAS DYNAMICS, LLC

Copyright © 2020 Douglas Dynamics, LLC. All rights reserved. This material may not be reproduced or copied, in whole or in part, in any printed, mechanical, electronic, film, or other distribution and storage media, without the written consent of Western Products. Authorization to photocopy items for internal or personal use by Western Products outlets or snowplow owner is granted.

Western Products reserves the right under its product improvement policy to change construction or design details and furnish equipment when so altered without reference to illustrations or specifications used. Western Products or the vehicle manufacturer may require or recommend optional equipment for snow removal. Do not exceed vehicle ratings with a snowplow. Western Products offers a limited warranty for all snowplows and accessories. See separately printed page for this important information. The following are registered (®) or unregistered (™) trademarks of Douglas Dynamics, LLC: Suburbanite™, WESTERN®.

Printed in U.S.A.